WINCHES				
FUNCTION	LOCATION	WIRE	MODES	SWL
OCEANOGRAPHIC TRACTION WINCH	AFT WINCH ROOM	0.681 FIBER-OPTIC, 9/16"ø, 3x19	RENDER/RECOVER	25,000 LBS
STORAGE REEL	AFT WINCH ROOM	12,000m, 9/16"ø, 3x19	FEEDS TRACTION WINCH	
STORAGE REEL	AFT WINCH ROOM	10,000m, 0.680 COAX E4	FEEDS TRACTION WINCH	
CTD WINCH	FWD WINCH ROOM	10,000m, 0.322 EM 260KG/KM	MO-COMP	11,100 LBS
HYDRO WINCH	FWD WINCH ROOM	10,000m, 0.322 EM	MO-COMP	11,100 LBS

FRAMES		
DEVICE	LOCATION	SWL
A-FRAME	TRANSOM	10,000 LBS LUFFING CENTER PADEYES E10
LHS FRAME	BALTIC ROOM	11,100 LBS(+/-53° IN CAST) 6,000 LBS (TOWING)
P/S DECK CRANES	FR 94 & 103 E3	35,437 LBS @ 25ft RADIUS LIFT CAPACITY DOCKSIDE 28,846 LBS @ 25ft RADIUS LIFT CAPACITY ONBOARD SS-5 13,000 LBS @ 25ft RADIUS LIFT CAPACITY OFFBOARD SS-5 13,000 LBS @ 25ft RADIUS LIFT CAPACITY OFFBOARD SS-5

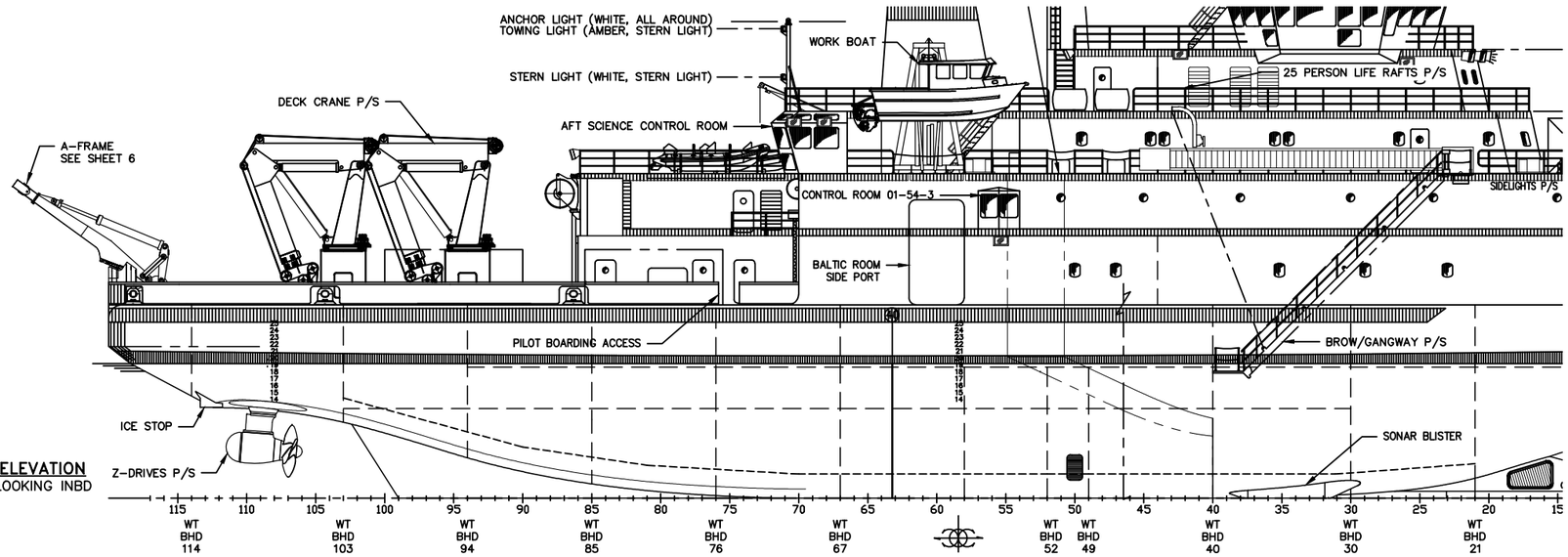

KEY ELEVATION
STBD LOOKING INBD

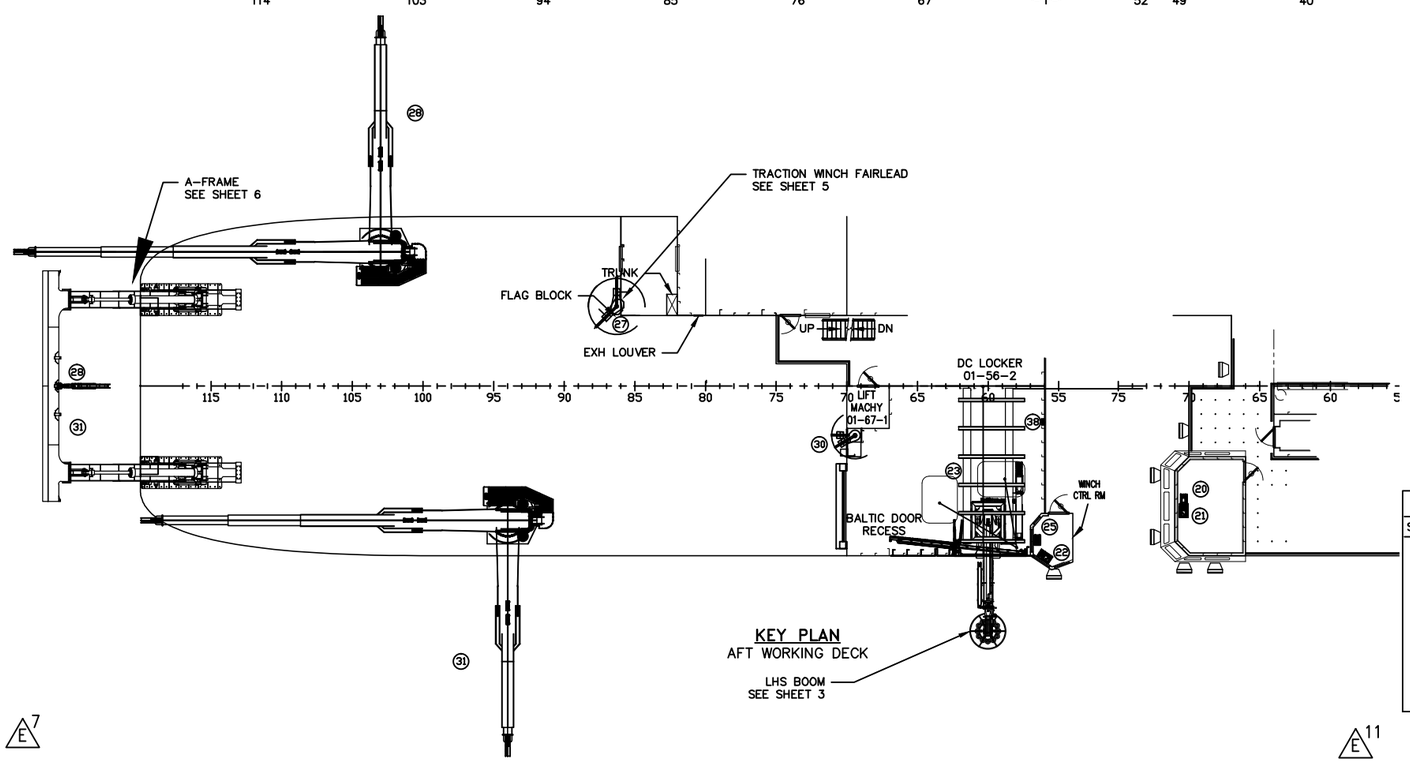

KEY PLAN
AFT WORKING DECK

LHS BOOM
SEE SHEET 3

E7

E11

E1

AS-BUILT

SHIP CHECK 3/10/2014

SHEET INDEX	
SHEET NO.	DESCRIPTION
1	KEY PLAN, GENERAL NOTES & REFERENCES
2	VENDOR SUPPLIED DRAWINGS AND REVISIONS
3	ELEVATION AND PLAN VIEW
4	PARTIAL ELEVATION, PLAN AND SECTION VIEWS
5	PARTIAL PLAN AND SECTION VIEWS
6	PARTIAL ELEVATION, PLAN, AND SECTION VIEWS
7	CRANE LOADS E12

GENERAL NOTES

1. ALL DIMENSIONS IN FEET AND INCHES.
2. THIS DRAWING SHOWS THE WIRE REEVING ARRANGEMENT FROM THE FORWARD WINCH RM TO THE BALTIC RM LOAD HANDLING SYSTEM (LHS), AFT DECK. THE STERN A-FRAME. ALSO SHOWN IS THE WIRE REEVING ARRANGEMENT FROM AFT WINCH ROOM TO THE FLAG BLOCK, TO THE STERN A-FRAME AND THE OUTLINE A-FRAME SPECIFICATIONS.
3. THE LHS SHOWN IS A RAPP HYDEMA/TRIPLEX ARRANGEMENT BASED ON A TELESCOPIC CRANE WITH THE REQUIRED SAFE WORKING LOAD AT THE REQUIRED WORKING RADIUS IN ORDER TO MEET THE OUTLINE SPECIFICATIONS.
4. CALCULATIONS AND INVESTIGATIONS INTO INCORPORATING AN LHS INTO THE VESSEL STRUCTURE SUGGEST THAT:

A) ANY LHS CARRIAGE OR EXTENDING BOOM MUST BE SUPPORTED ON TWO TRANSVERSE BEAMS,

B) THE LHS CARRIAGE SHALL HAVE 8 OR MORE WHEELS (WITH 4 WHEELS) CONTACTING EACH TRANSVERSE BEAM.

C) THAT THE FULL WIDTH OF THE BALTIC RM SHALL BE REQUIRED TO ACCOMMODATE THE CARRIAGE AND DEPLOYMENT HYDRAULICS

D) AN APERTURE ABOVE THE BALTIC ROOM SHELL DOOR SHALL BE REQUIRED TO ENSURE THE LHS MAINTAINS A 12.0' CLEARANCE ABOVE THE MAIN DECK. THE CLOSING ARRANGEMENT FOR THIS APERTURE TBC.

5. THE HYDRO WINCH WIRE PENETRATES THE TRANSVERSE BULKHEAD AT FR. 67 BETWEEN THE FORWARD WINCH ROOM AND THE SCIENCE HOLD. THIS WIRE TRANSIT THROUGH A WT BULKHEAD SHALL BE ENCLOSED IN A WATERTIGHT VOID SPACE LEADING TO A PIPE TAKING THE OPENING EFFECTIVE TO THE 02 LEVEL LEVEL.

REFERENCES

1. MMC DRAWING NO 0650-601-01 GENERAL ARRANGEMENT
2. MMC DRAWING NO 0650-100-02 STRUCTURE 01 LEVEL & BELOW.
3. MMC DRAWING NO 0650-100-03, STRUCTURE ABOVE 01 LEVEL.
4. MMC DRAWING NO 0650-100-04, STRUCTURAL FOUNDATIONS
5. ALASKA REGION RESEARCH VESSEL CONTRACT SPECIFICATIONS, REV E
6. APPLETON CRANE DWG NO BMD-0643
7. A-FRAME DRAWING NO 0650-711-01
8. LHS DRAWING NO 12182
9. MMC DRAWING NO 0650-611-01 PADEYE PLACEMENT FOR EQUIPMENT REMOVAL

REVISIONS

ZONE	REV	DESCRIPTION	DATE	APPD
ALL	-	ORIGINAL ISSUE CONTINUED ON SHT 2	3-7-2011	FG

RAPP HYDEMA
Phone: 206 286 8162
Fax : 206 286 3084
E-mail : office@rappus.com

MARINETTE MARINE CORPORATION
MARINETTE WI, 54143

PE STAMP:

DATE:

APRV: Justin Slater

APRV: Fred Gignac

CHKD: Dan Markovic

DWN: Dan Markovic

USCG APVD: DATE:

ABS APVD: DATE:

CONTRACT NO: UAF 10-0040

UNIVERSITY OF ALASKA FAIRBANKS
FAIRBANKS, ALASKA

"R/V SIKULIAQ"

OVERSIDE EQUIPMENT HANDLING ARRANGEMENT E12

SIZE	FSCM CAGE NO	DRAWING NO.	REV
D	98042	0650-714-01	G

SCALE

SHEET 1 OF 7

NO.	TITLE	QTY	RAPP DWG NO.	NOTES.
43				
42	SHEAVE, 28", GLEIPNIR T248-1000	2	T248-1000	
40	MRU	1	RH314605	
39				
38	LHS LOCAL CONTROLS	1	RH311630A	
37	EMERGENCY CONTROL PORTABLE PANEL	2	RH312003	
36	ELECTRIC DRIVE SYSTEM CABINET	1	RH313871	
35	7 SEGMENT DISPLAY	1	RH313985	
34	CTD WINCH SHEAVE DOCKING HEAD	1	00512-0	20" GLEIPNIR
33	CTD WINCH SHEAVE OVERSIDE FRAME	1	T248-0004/00675-1	36" GLEIPNIR
32	CTD WINCH SHEAVE, BALTIC R, INSTRUMENTED	1	T248-0002/00681-1	36" GLEIPNIR
31	HW SHEAVE A-FRAME OR STBD CRANE	1	00695	36" GLEIPNIR
30	HYDRO WINCH SHEAVE	1	T248-0002/00681-1	36" GLEIPNIR
29	HYDRO WINCH SHEAVE, INSTRUMENTED	1	T248-0002/00681-1	36" GLEIPNIR
28	OCEAN WINCH SHEAVE A-FRAME	1	00696	48" GLEIPNIR
27	OCEAN WINCH SHEAVE, INSTRUMENTED	1	T248-0001/00686-1	48" GLEIPNIR
26	STARTER FOR LHS	1	RH304669	
25	CONTROL PANEL FOR LHS	1	3R77/16	
24	LHS HPU	1	RH102774	
23	LHS	1	12182	
22	ASC CONTROL PANEL HW/CTD WINCHES	1	RH313826	
21	ASC CONTROL PANEL HW/CTD WINCHES	1	RH313826	
20	ASC CONTROL PANEL TRACTION WINCH	1	RH311505	
19	PRESSURE WASHER PUMP	1		
18	NOZZLE BOX	3	RH315072	
17	LOCAL CONTROL PANEL TRACTION WINCH	1	RH313746	
16	LOCAL CONTROL PANEL STORAGE REELS	2	RH311630	
15	HYD COOLING FOR GEARS CTD WINCH	1	RH304682	
14	HYD COOLING FOR GEARS HYDRO WINCH	1	RH304682	
13	HYD COOLING FOR GEARS OCEAN SYSTEM	1	RH304683	
12	HYD COOLING CTD/HW EL MOTORS	1	RH304681	
11	HPU FOR BRAKE CONTROL	1	RH304684	
10	WATER COOLED BRAKE RESISTOR	1	RH315183A	
9	CTD WINCH	1	RH313724	
8	HYDROGRAPHIC WINCH	1	RH313724	
7	LEVEL WIND RH	1	RH314164	
6	STORAGE DRUM 2 LH, 9/16" WIRE, 29570LBS	1	RH314163	
5	LEVEL WIND LH	1	RH310325	
4	STORAGE DRUM 1 RH, .68" WIRE, 32860LBS	1	RH310324	
3	SHEAVE FOR OCEAN WINCH	1	RH313983	
2	SLACK WIRE COMPENSATOR	1	RH313902	
1	OCEANOGRAPHIC WINCH (TRACTION WINCH)	1	RH310323	

G 2

E 7

REVISIONS

SHT	REV	DESCRIPTION	DATE	APPROVED
1	A	1. IMPLEMENTED NOTES BY UAF: MW1, MW2, MW4, 1), 2),	7/12/2011	FG
3		2. IMPLEMENTED NOTES BY UAF: MW2 TO MW7, 1)		
4		3. IMPLEMENTED NOTES BY UAF: MW1		
5		4. IMPLEMENTED NOTES BY UAF: MW1, MW4		
6		5. IMPLEMENTED NOTES BY UAF: MW1, MW2, MW3, MW4		
5		6. BRAKE RESISTOR REPOSITIONED ABOVE SLACK WIRE COMPENSATOR		
3,4,6		7. HW BLOCK, FACING AFT IS THE SAME TYPE AS CTD AND HW FLAG BLOCKS		
3,4		8. LEAD BLOCK TO THE LHS REPLACED		
4		9. LHS HPU MOVED INBOARD TO CLEAR MANHOLES		
3		10. REAL SIZE OF THE ROSETTE TO BE INSTALLED FIRST SHOWN		
3		11. LHS LOCAL CONTROLS ADDED IN BALTIC ROOM		
3				
1 & 4		13. NEW DRAWING FOR OCEAN SYSTEM ADDED (HIGHER EL MOTOR MOUNT		
1,2,3		14. LHS WITH SHORTER RAIL ADDED		
5		15. HEAVIER STORAGE DRUM CLOSER TO THE CRANE		
5		16. OCEAN SYSTEM MOVED 2.5" FWD		
1 & 4		17. PAD EYES LOCATIONS SUGGESTED		
2	B	18. HANGING BLOCKS 28 AND 31 NAMED	9/19/2011	FG
4		19. DAVIT HPU REMOVED FROM FWD WINCH ROOM		
3,4		20. BALTIC ROOM DOOR LIFTED 2", TO 6" SILL		
2		21. NOTES UPDATED		
1		22. A-FRAME RESERVED		
4		23. WINCH ROTATING & DRUM LIFTING PADEYES LOCATED		
4		24. ITEMS 18 & 19 REMOVED, CTRLS ARE ON THE WINCHES		
5		25. TR. WINCH FOUNDATION SHORTENED, NO INTERFERENCE		
5		26. ANGLED MOTORS ON STORAGE DRUMS		
5		27. 5'-3" AND 12' DIMENSIONS FOR LHS SHOWN		
3,4		28. MRU ADDED, ITEM 40		
3,4		29. CTD WINCH SHEAVE REDESIGNED, LOWERED 2" (ITEM33)		
5		30. ADDED 5" COAMING AROUND TRACTION WINCH		
4,5		31. DRUM + WIRE WEIGHTS ADDED		
4,5		32. WIRE LUB & WASHING SYSTEMS ADDED, ITEMS 18,19,41		
2		33. 2EA 28" BLOCKS ADDED TO SHEAVE LIST		
1		34. REFERENCE LIST UPDATED		
4,5	C	35. DRAWINGS FOR COOLERS 13.14 & 15 INSERTED	1/5/2012	FG
2,3,5		36. BRAKE RESISTOR DRAWING CHANGED		
5		37. STORAGE DRUMS WEIGHTS CHANGED (LIGHTER)		
1,3,6		38. CRANE INSERTED		
1,3,6		39. AFT A-FRAME INSERTED		
1,4		40. BALTIC ROOM DOOR INSERTED		
4,5,6		41. LHS CROSS MEMBERS REPOSITIONED TO MATCH STRUCTURE		
3,4		42. LHS STARTER ITEM # 26 PLACED IN FWD WINCH ROOM		
ALL		43. UAF COMMENTS APPLIED		
ALL	D	REVISED PER UAF REV C COMMENTS DATED MARCH 8TH, 2012. ADDED SHEET 7 & VIEWS SHOWING MAN-BASKET & CRANE BLOCK STORAGE. MOVED CRANE LOAD CHART TO SHEET 7. INCORPORATED ECN002. ECN001 CANCELED. DELETED ELEVATION 31-D, SHEET 4. REVISED A-FRAME SWL TO 30,000LBS FOR CENTER PADEYES, 3,000LBS, OUTBOARD PADEYES , SHEET 6.	DEC 17th, 2012	FG

E 2 CONTINUED IN ZONE 10-D

REVISIONS

SHT	REV	DESCRIPTION	DATE	APPROVED
1	E	1. DRAWING REVISION E ISSUED "AS-BUILT"	3/10/2014	DR
2		2. NOTE ADDED FOR CLARITY		
1		3. P/S AFT DECK CRANES SWL UPDATED		
1		4. CABLE CORRECTED TO 0.680 WAS 0.681		
6		5. MAX ALLOWABLE LOAD NOTATION REMOVED PER UAF REQUEST		
7		6. LHS LOAD TABLE ADDED		
ALL		7. LINEWEIGHTS, LABELS, AND FONT SIZE ADJUSTED THROUGHOUT FOR CLARITY AND CONSISTENCY		
5		8. GUARD ADDED TO AFT MACHINERY WINCH		
3-5		9. REVISED LHS MRU LOCATION TO REFLECT AS BUILT CONDITION, NOW LOCATED IN FWD WINCH ROOM		
6		10. A-FRAME LOAD RESTRICTIONS UPDATED TO REFLECT AS BUILT CONDITION, LUFFING CAPACITY IS NOW 10 KIPS, PADEYE SAFETY FACTORS DISPLAYED		
1,7		11. REMOVED MAN BASKET STOWING ARRANGEMENT AND EDIT SHEET DESCRIPTION TO MATCH, REMOVED PERSONNEL LIMIT FROM CRANE LOAD TABLES		
ALL		12. RENAMED SHEET VIEWS		
7		13. ADDED FLAG BLOCK PINNED POSITIONS		
3	F	1. PLAN 23-B, RELOCATED FIND NUMBER 38	8/07/2014	
4		2. PLAN 26-B, CHANGED NOTE SPECIFYING SIDE PADEYE CAPACITY FROM 4 TON TO 2.5 TON		
4		3. PLAN 31-A, RELOCATED FIND NUMBER 26 FWD OF LHS HPU		
4		4. PLAN 31-A, RELOCATED SIDE PADEYE FWD TO BHD 55		
4		5. PLAN 31-A, RELOCATED FIND NUMBERS 12 AND 14		
4		6. PLAN 31-A, ADDED FIND NUMBER 15		
4		7. PLAN 31-A, CHANGED NOTE SPECIFYING PADEYE CAPACITY FROM 4 TON TO 2.5 TON		
ALL	G	1. DRAWING REVISION G ISSUED "AS-BUILT"	11/21/2014	DF
2		2. FN 41, "WIRE LUBRICATING SYSTEM" QTY 3 DELETED PER UAF COMMENT STATING THE SYSTEM WAS NOT DELIVERED WITH THE VESSEL.		

OCEANOGRAPHIC TRACTION	SHEAVES		
	LOCATION	DIAMETER	TYPE
SHEAVE #1	02 LEVEL PORT	48 INCHES	FLAGGING, INSTRUMENTED T248-0001, GLEIPNIR
SHEAVE #2	A-FRAME	48 INCHES	HANGING, GLEIPNIR
HYDRO WINCH			
	LOCATION	DIAMETER	TYPE
SHEAVE #1	1ST PLATFORM	36 INCHES	FLAGGING, INSTRUMENTED T248-0002, GLEIPNIR
SHEAVE #2	02 LEVEL STBD	36 INCHES	FLAGGING, T248-0002, GLEIPNIR
SHEAVE #3	A-FRAME OR STBD CRANE	36 INCHES	HANGING, GLEIPNIR
CTD WINCH			
	LOCATION	DIAMETER	TYPE
SHEAVE #1	01 LEVEL BALTIC	36 INCHES	FLAGGING, INSTRUMENTED T248-0002, GLEIPNIR
SHEAVE #2	OVERSIDE FRAME	36 INCHES	T248-0004, GLEIPNIR
SHEAVE #3	DOCKING HEAD	20 INCHES	00512-0 GLEIPNIR
TRAWL BLOCKS			
	LOCATION	DIAMETER	TYPE
BLOCK # 1	A-FRAME	28 INCHES	GLEIPNIR T248-1000, 2EA

UNIVERSITY OF ALASKA FAIRBANKS
FAIRBANKS, ALASKA

ALASKA RESEARCH VESSEL
OVERSIDE EQUIPMENT HANDLING ARRANGEMENT

VENDOR SUPPLIED DRAWINGS AND REVISIONS E 12

Drawn by	Date	Checked by	Date	Approved by	Date
Dan M	09/13/10	Dan M	09/13/10	FG	03/7/11

Scale	Drawing Number	Rev
AS NOTED	0650-714-01 Sheet 2 of 7	G

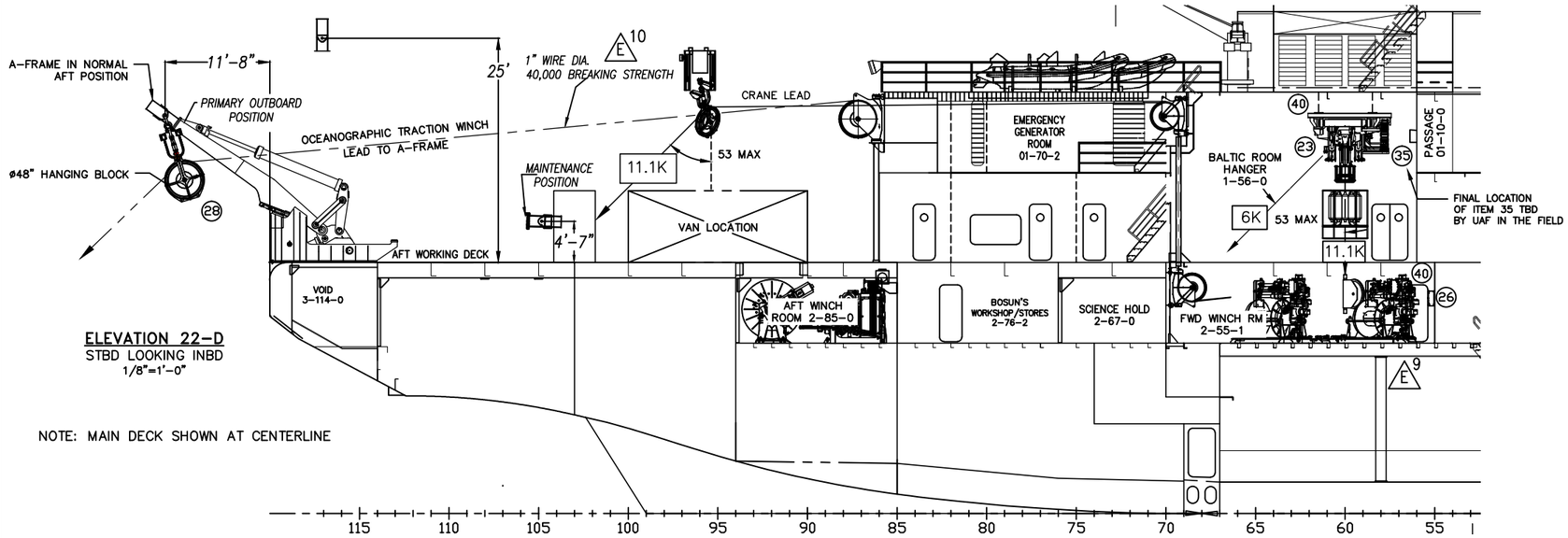

ELEVATION 22-D
STBD LOOKING INBD
1/8"=1'-0"

NOTE: MAIN DECK SHOWN AT CENTERLINE

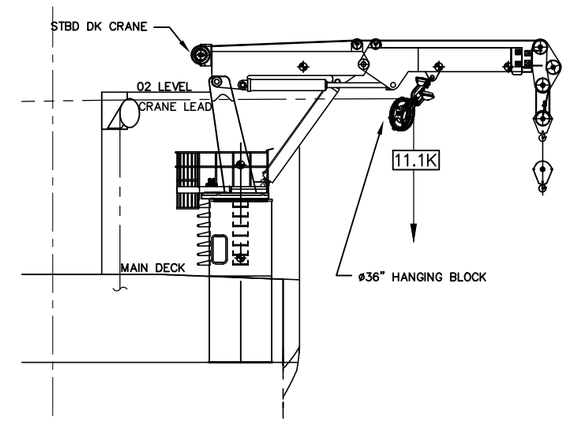

SECTION 18-D
FR 95 STBD LOOKING FWD
1/8"=1'-0"

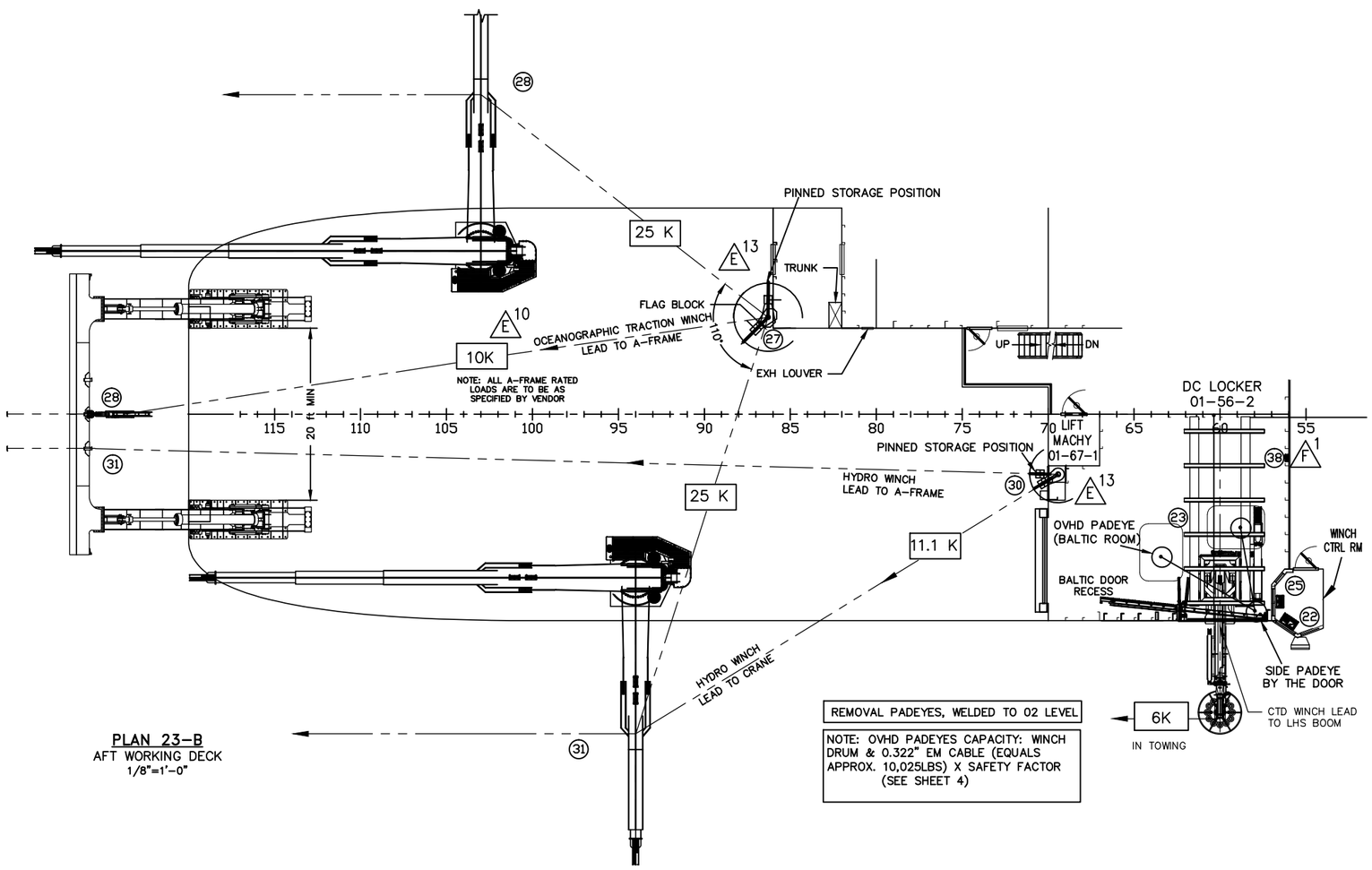

REMOVAL PADEYES, WELDED TO 02 LEVEL

NOTE: OVHD PADEYES CAPACITY: WINCH DRUM & 0.322" EM CABLE (EQUALS APPROX. 10,025LBS) X SAFETY FACTOR (SEE SHEET 4)

PLAN 23-B
AFT WORKING DECK
1/8"=1'-0"

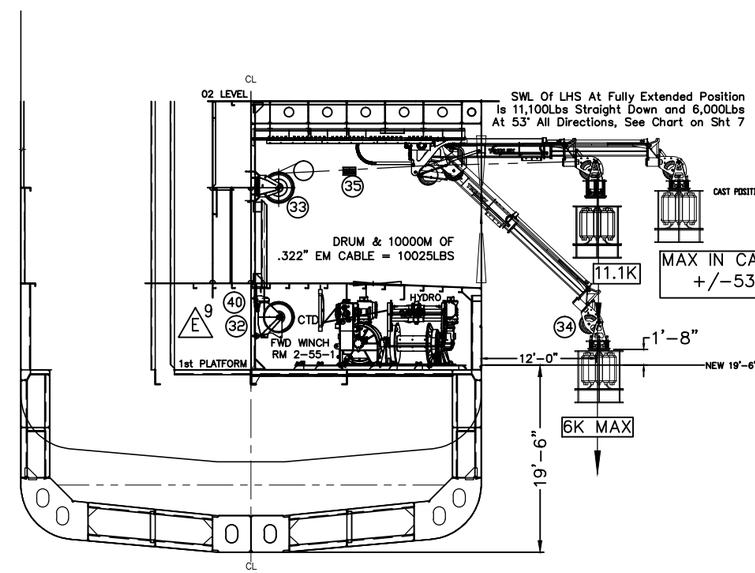

SECTION 18-B
FR 63 (S) LOOKING FWD, LHS
CAST POSITION
1/4"=1'-0"

UNIVERSITY OF ALASKA FAIRBANKS
FAIRBANKS, ALASKA

ALASKA RESEARCH VESSEL
OVERSIDE EQUIPMENT HANDLING ARRANGEMENT

ELEVATION, PLAN, AND SECTIONS VIEWS E 12

Drawn by	Date	Checked by	Date	Approved by	Date
Dan M	09/13/10	Dan M	09/13/10	FG	3/7/11

Scale	Drawing Number	Rev
AS NOTED	0650-714-01 Sheet 3 of 7	G

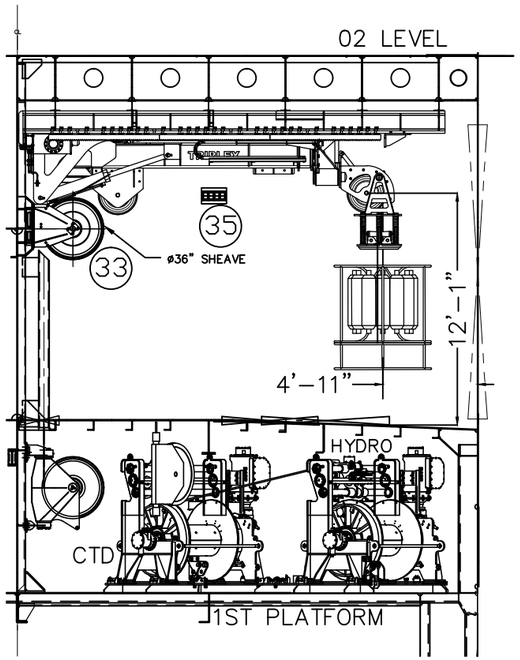

SECTION 32-C
FR 63 (S) LOOKING FWD, LHS
PARKED POSITION, NO
CYLINDERS ENGAGED
1/4"=1'-0"

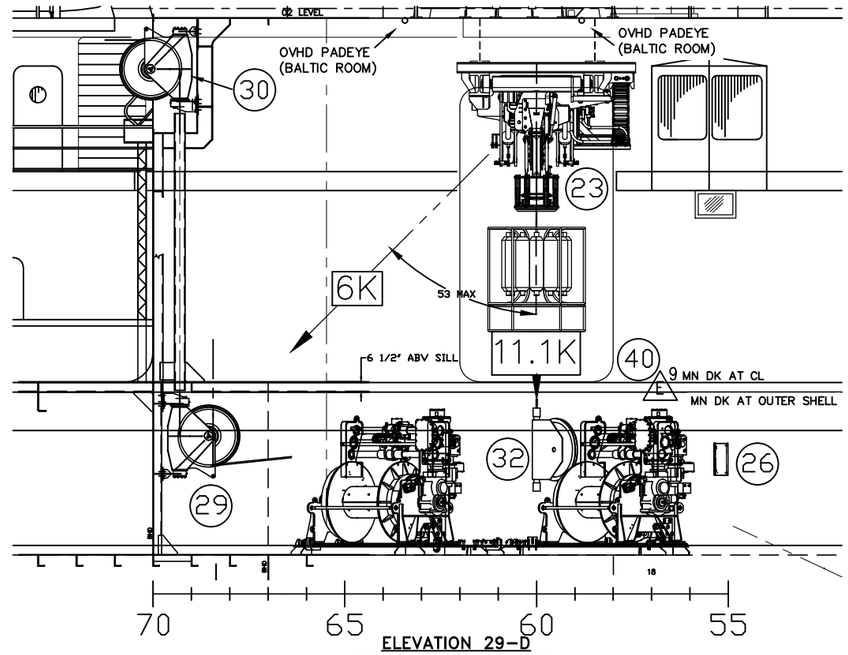

ELEVATION 29-D
CTD WINCH TO LHS POSITION
STBD LOOKING INBD
1/4"=1'-0"

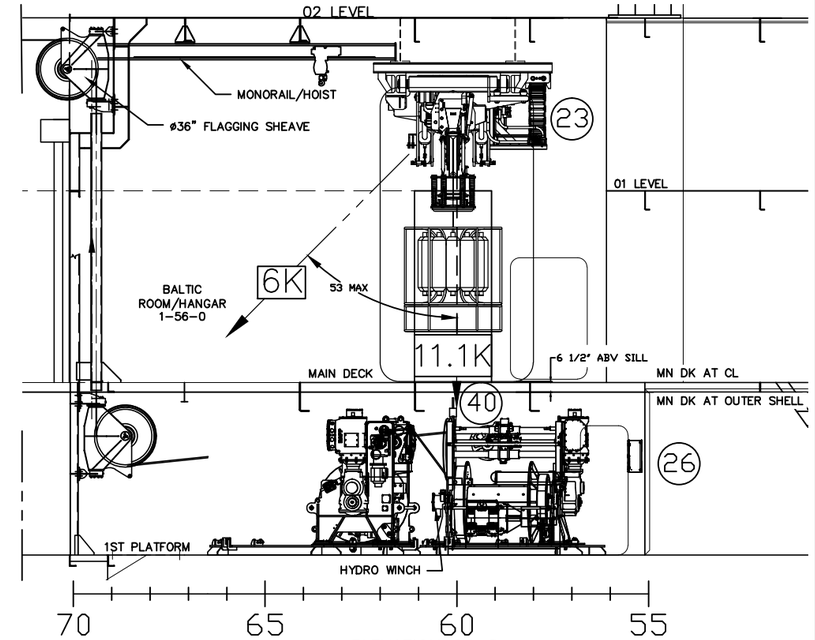

ELEVATION 26-D
DRUM LIFTING POSITION
STBD LOOKING INBD
1/4"=1'-0"

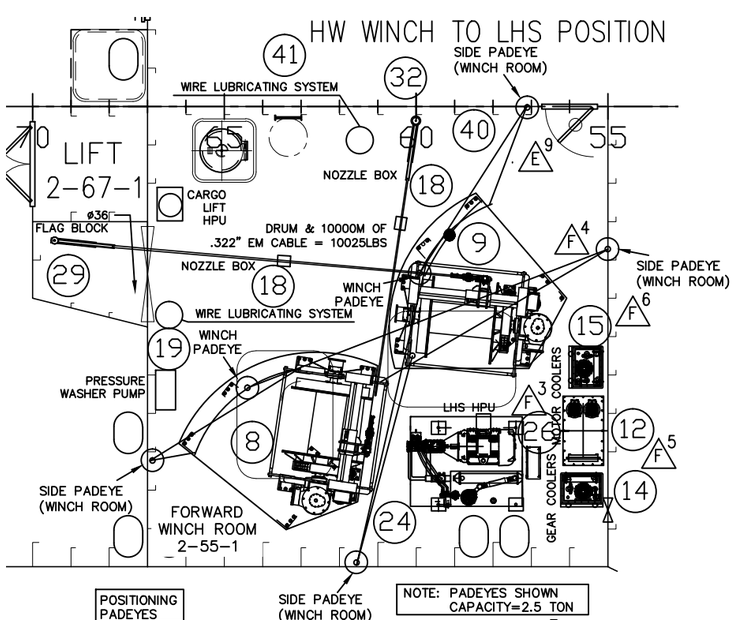

PLAN 31-A
CTD/HW POSITION
HW WINCH TO LHS POSITION
1/4"=1'-0"

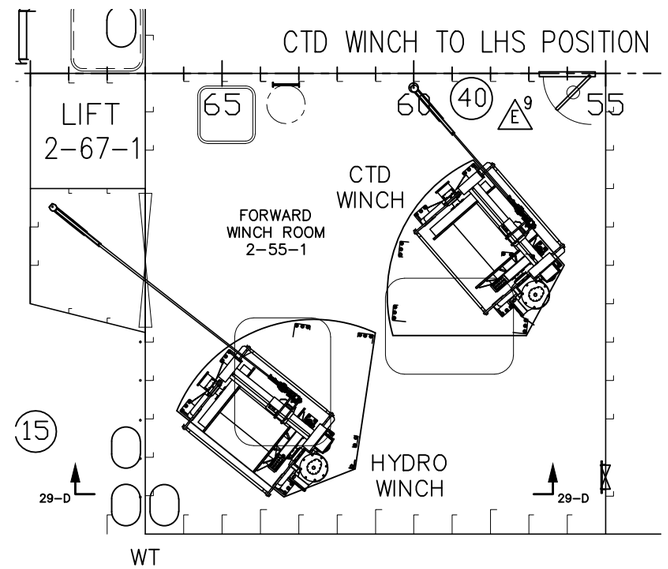

PLAN 29-B
CTD/HW POSITION
CTD WINCH TO LHS POSITION
1/4"=1'-0"

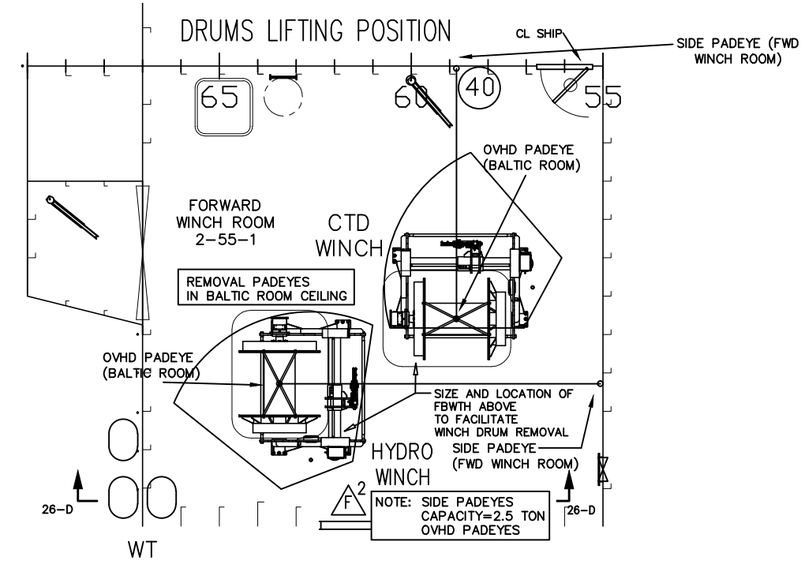

PLAN 26-B
CTD/HW POSITIONS
DRUMS LIFTING POSITION
1/4"=1'-0"

UNIVERSITY OF ALASKA FAIRBANKS
FAIRBANKS, ALASKA

ALASKA RESEARCH VESSEL
OVERSIDE EQUIPMENT HANDLING ARRANGEMENT

VENDOR SUPPLIED DRAWINGS AND REVISIONS E12

Drawn by	Date	Checked by	Date	Approved by	Date
Dan M	09/13/10	Dan M	09/13/10	FG	3/7/11

Scale	Drawing Number	Rev
AS NOTED	0650-714-01 Sheet 4 of 7	G

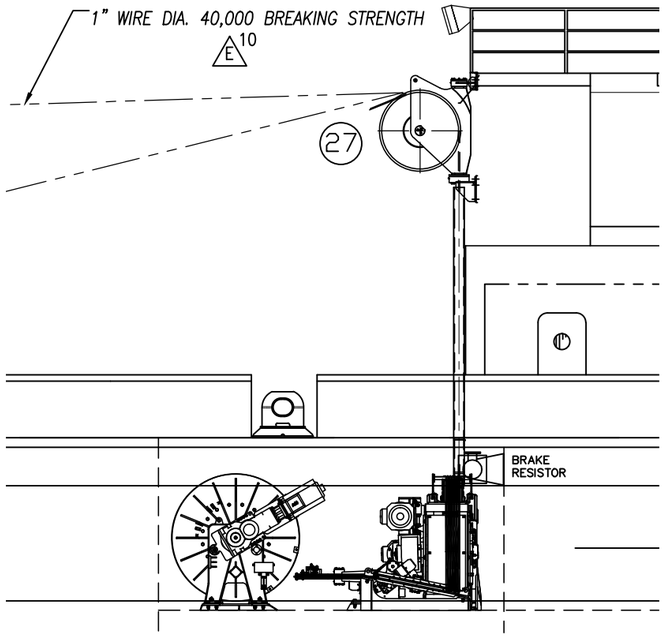

ELEVATION 39–D
CL LOOKING TO PORT
1/4"=1'–0"

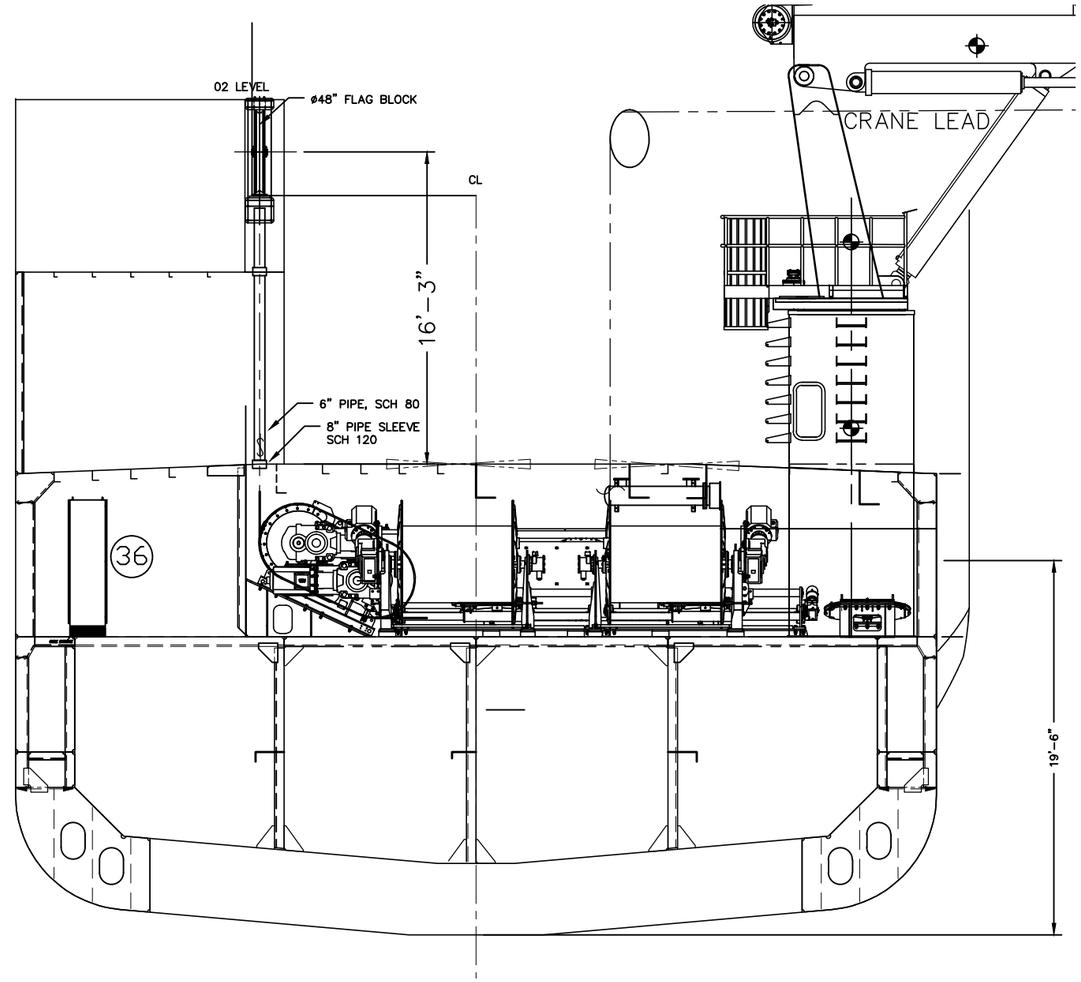

SECTION 38–C
FR 95 LOOKING FWD
BKD REMOVED FOR CLARITY
1/4"=1'–0"

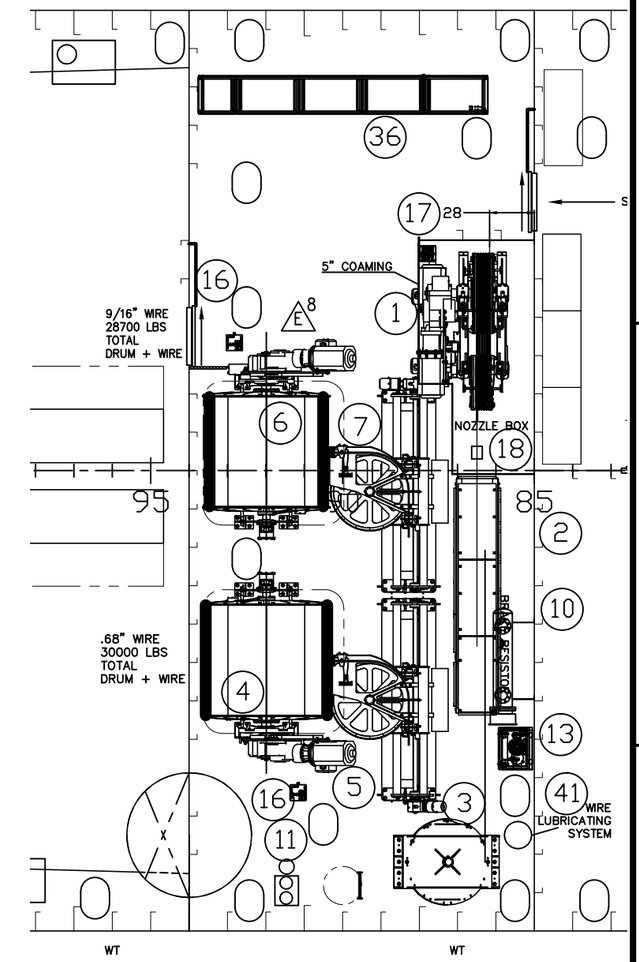

PLAN 33–C
1ST PLATFORM
1/4"=1'–0"

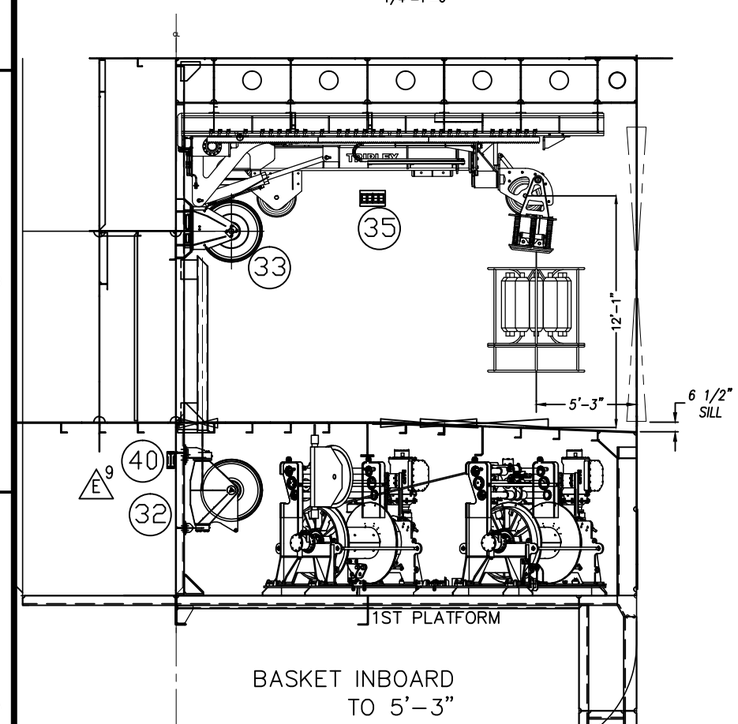

SECTION 39–A
FR 63 (S) LOOKING FWD, LHS
PARKED POSITION WITH
CYLINDERS ENGAGED
1/4"=1'–0"

E 7

UNIVERSITY OF ALASKA FAIRBANKS
FAIRBANKS, ALASKA

ALASKA RESEARCH VESSEL
OVERSIDE EQUIPMENT HANDLING ARRANGEMENT

PARTIAL PLAN AND SECTION VIEWS E 12

Drawn by	Date	Checked by	Date	Approved by	Date
Dan M	09/13/10	Dan M	09/13/10	FG	3/7/11
Scale		Drawing Number			Rev
AS NOTED		0650–714–01	Sheet 5 of 7		G

NOTE: ALL A-FRAME RATED LOADS ARE TO BE AS SPECIFIED BY VENDOR
OUTER PADEYE SF: 1.5:1
INNER PADEYE SF: 6:1 @ 10K LUFFING LOAD

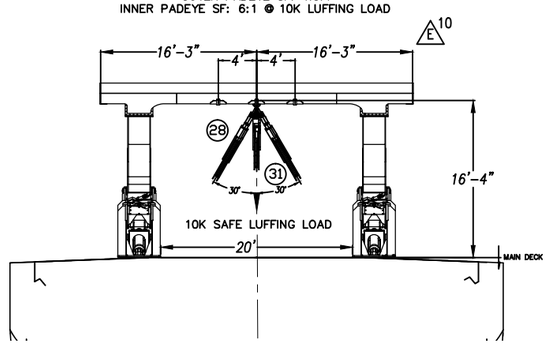

SECTION 47-D
STERN LOOKING FORWARD
1/8"=1'-0"

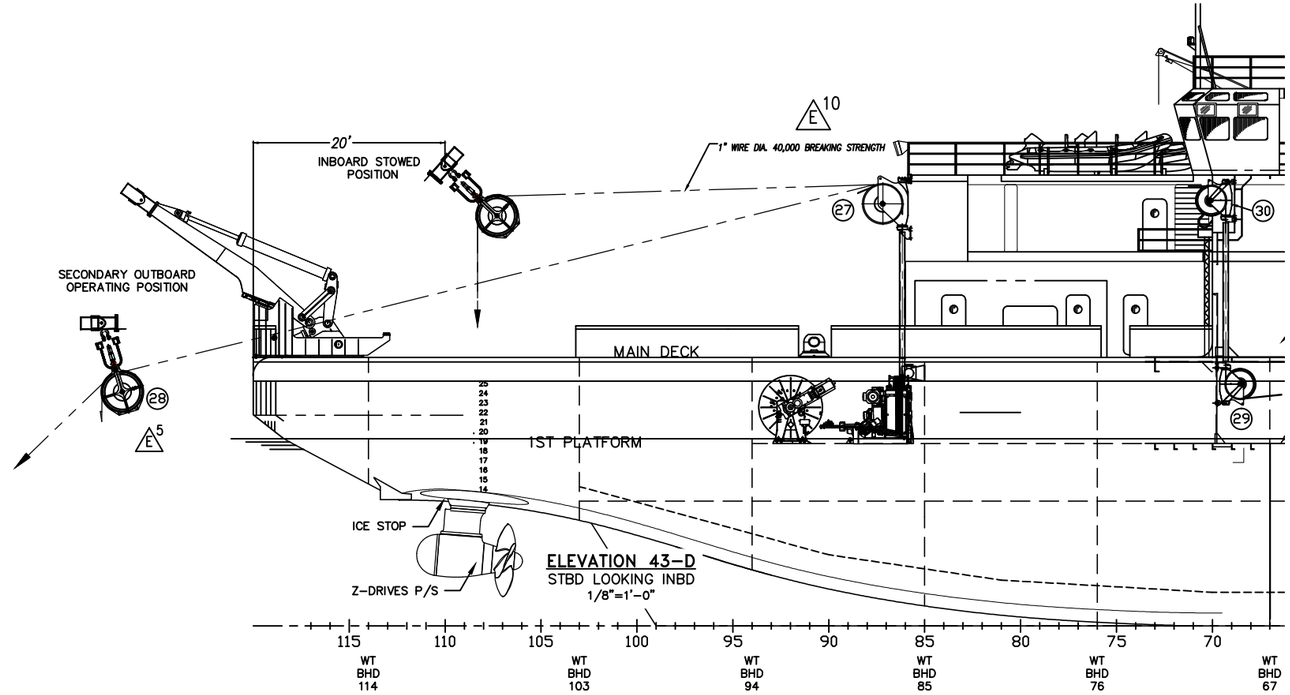

ELEVATION 43-D
STBD LOOKING INBD
1/8"=1'-0"

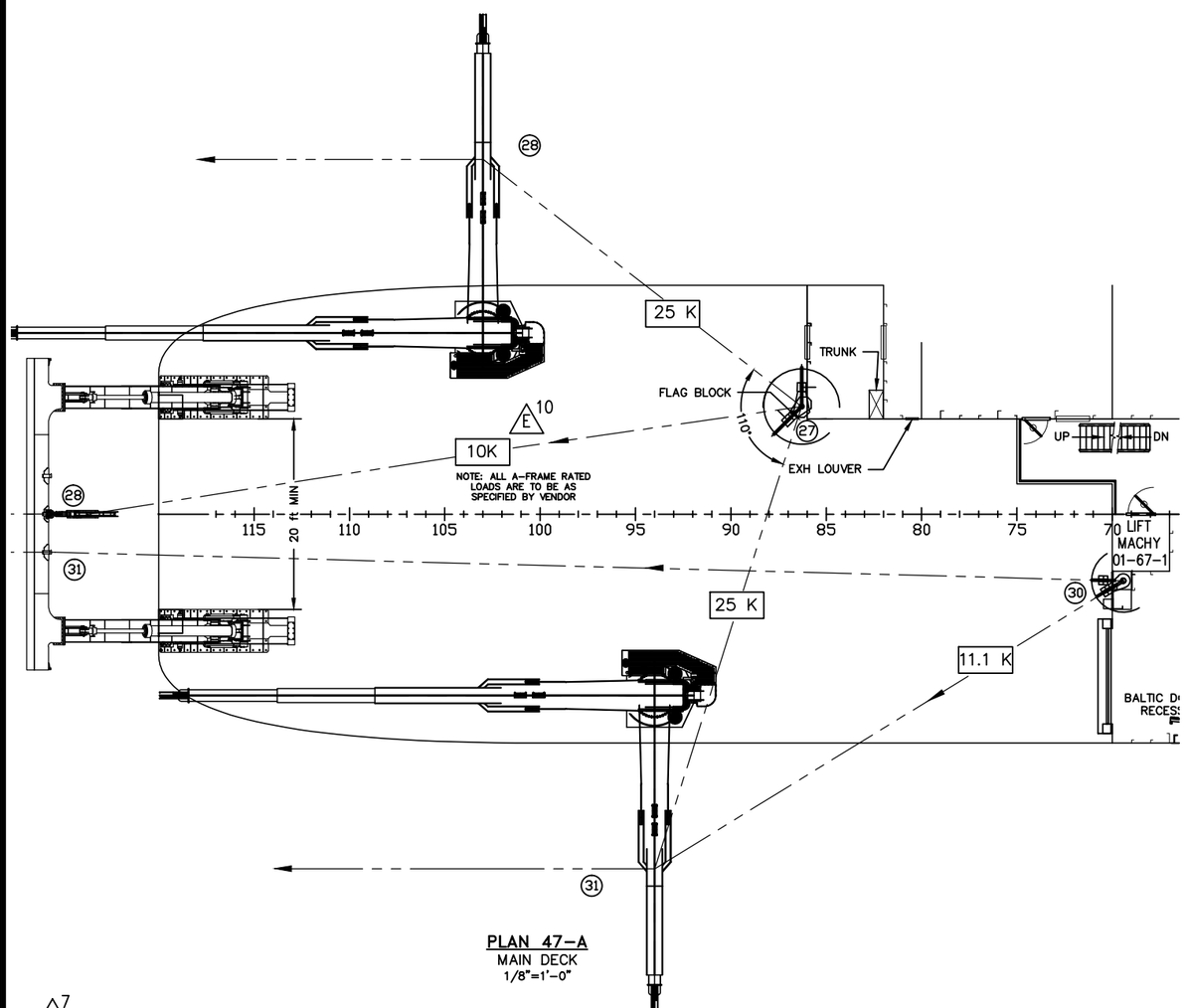

PLAN 47-A
MAIN DECK
1/8"=1'-0"

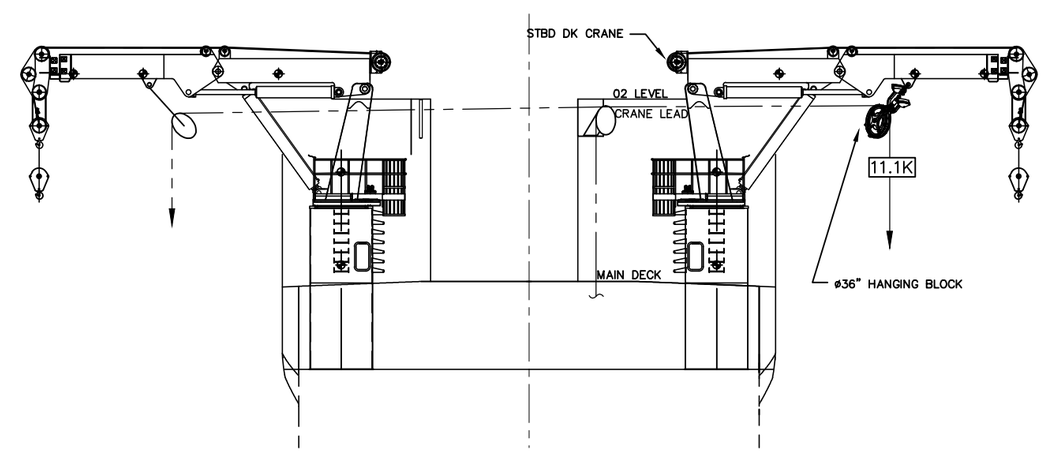

ELEVATION 43-B
LOOKING FWD
1/8"=1'-0"

UNIVERSITY OF ALASKA FAIRBANKS
FAIRBANKS, ALASKA

ALASKA RESEARCH VESSEL
OVERSIDE EQUIPMENT HANDLING ARRANGEMENT

PARTIAL ELEVATION, PLAN, AND SECTIONS VIEWS E 12

Drawn by	Date	Checked by	Date	Approved by	Date
Dan M	09/13/10	Dan M	09/13/10	FG	03/7/11

Scale	Drawing Number	Rev
AS NOTED	0650-714-01 Sheet 6 of 7	G

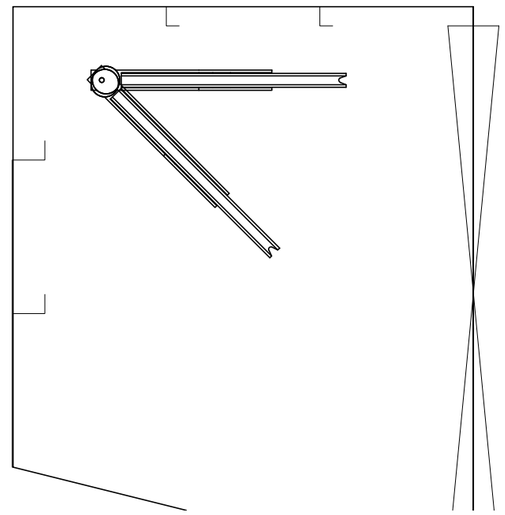

PLAN 53–C
FLAG BLOCK FROM FWD WINCH ROOM TO WORKING DECK
PINNED STORAGE POSITIONS
E 13

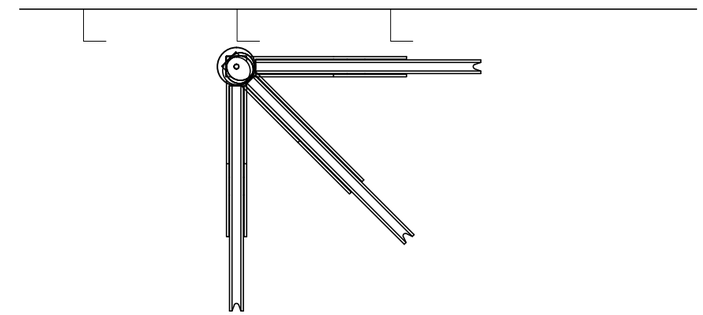

PLAN 50–C
FLAG BLOCK FROM FWD WINCH ROOM TO LHS
PINNED STORAGE POSITIONS
E 13

E 11

ELEVATION 55–B
CRANE BLOCK STORAGE
VIEW FROM PORT SIDE, CRANE IN STORAGE
POSITION POINTED AFT
MAIN DECK
FOR REFERENCE ONLY

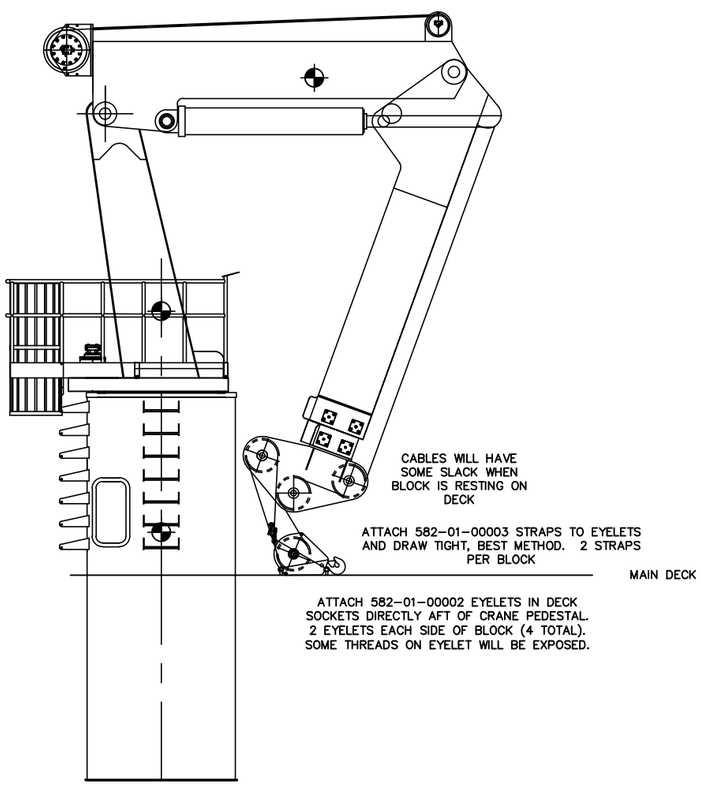

E 7

KEB190-50-30 LOAD CHART			
Radius	Dock Side Capacity	Sea State 5 Onboard Capacity	Sea State 5 Offboard Capacity
Feet	Pounds	Pounds	Pounds
6.98	35437	35437	13000
10.00	35437	35437	13000
15.00	35437	35437	13000
20.00	35437	35437	13000
25.00	35437	28846	13000
30.00	28000	23846	8000
35.00	23000	19230	5000
40.00	20000	15625	3000
45.00	17000	12500	2500
50.00	15000	9357	2000

E 11

AFT CRANES LOAD CHART

LHS Crane Capacity Load Chart Position Maximum Lifting Capacity @ Sea State 5	
Telescope Cylinder Fully Retracted Position	SWL 11100 lbs
Telescope Cylinder Maximum Extended Position	SWL 6000 lbs
Deployment/Recovery Position	SWL 6000 lbs
Towing Position	SWL 6000 lbs
Load Position	SWL 11100 lbs
Parked Position	SWL 11100 lbs

LHS CRANE LOAD CHART
E 6

UNIVERSITY OF ALASKA FAIRBANKS
FAIRBANKS, ALASKA

ALASKA RESEARCH VESSEL
OVERSIDE EQUIPMENT HANDLING ARRANGEMENT

CRANE LOADS
E 12

Drawn by	Date	Checked by	Date	Approved by	Date
Dan M	09/13/10	Dan M	09/13/10	FG	03/7/11

Scale	Drawing Number	Rev
AS NOTED	0650–714–01 Sheet 7 of 7	G